Gear Pumps
Group 0 and Group 1

General Information

The Danfoss Group 0 and Group 1 is a range of peak performance fixed-displacement gear pumps. Constructed of a high strength extruded aluminum body with aluminum cover and flange, all pumps are pressure-balanced for exceptional efficiency. The flexibility of the range, combined with high efficiency and low noise, makes the pumps in this series ideal for a wide range of applications, including: turf care, aerial lifts, material handling, and power packs.

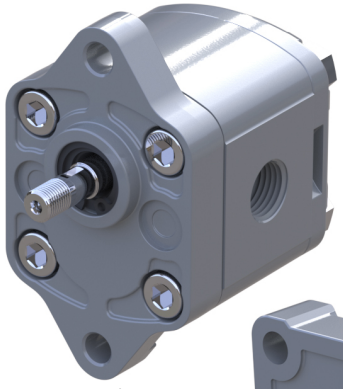

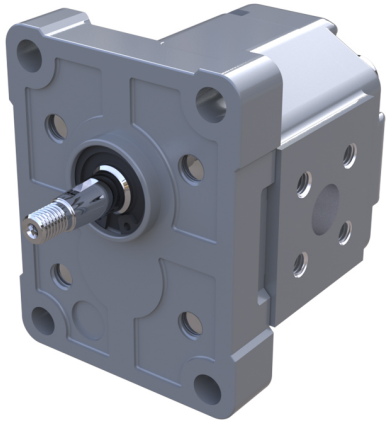

Features and benefits

- Up to 16 displacements from 0,25 to 12 cm3 /rev [from 0.015 to 0.732 in3 /rev
- Continuous pressure rating up to 250 bar [3625 psi]
- Speeds up to 4000 min-1 (rpm) • SAE, ISO, and DIN mounting flanges and shafts
- Compact, lightweight, quiet operation
- Group 1 units are available as unidirectional and bi-directional motors, also with integral relief valve
- You can combine groups 1, 2 and 3 to make multi-stage pump

Group 0

OwerTFP0NN pumps provide flexibility, numerous displacements, features, and shaft/port options. The TFP0NN series has earned an excellent reputation for rugged, dependable performance at continuous pressures and speeds. TFP0NN 01FA TFP0NN pumps are available in five displacements from 0.25 to 1.27 cm3 /rev [0.015 to 0.075 in3 /rev]

Special features of Group 0 pumps include:

- Wide range of displacements
- Parallel shaft ends
- Standard mounting flange (European, 2-bolt)
- European port options

GROUP 0

Technical data – Group 0 gear pumps

		Frame size				
		,25	,45	,57	,76	1,3
Displacement	cm^3/rev [in^3/rev]	0.25 [0.015]	0.45 [0.027]	0.57 [0.034]	0.76 [0.045]	1.27 [0.075]
Peak pressure	bar [psi]	200 [2900]	200 [2900]	200 [2900]	200 [2900]	200 [2900]
Rated pressure	bar [psi]	180 [2600]	180 [2600]	180 [2600]	180 [2600]	180 [2600]
Minimum pressure at maximum speed	bar [psi]	103 [1500]	103 [1500]	103 [1500]	103 [1500]	103 [1500]
Minimum speed at 103 bar [1500 psi]	min^{-1} (rpm)	500	500	500	500	500
Maximum speed	min^{-1} (rpm)	8000	8000	8000	7000	5000

Dimensions

TFPONN-01FA

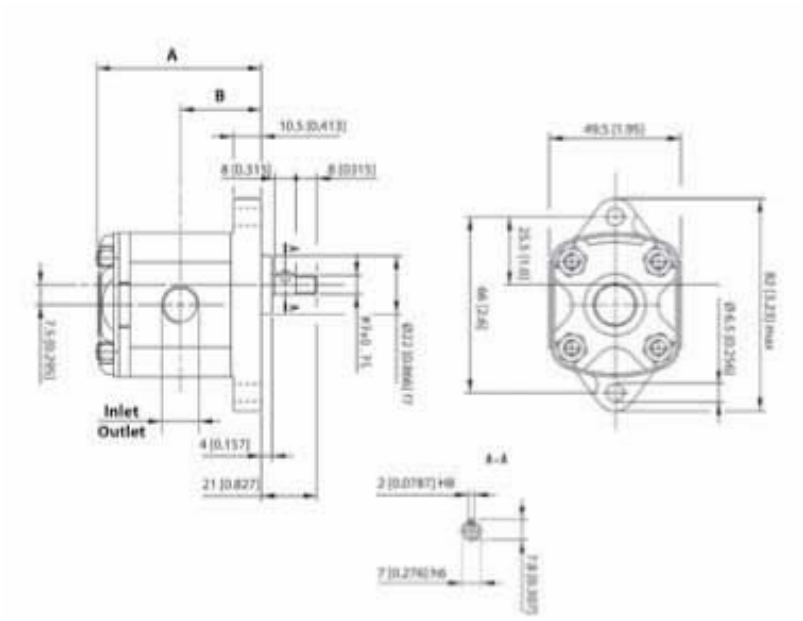

TFP0NN dimensions

Frame size		,25	,45	,57	,76	1,3
Dimension	**A**	53.5 [2.10]	55.0 [2.16]	56.0 [2.20]	61.5 [2.42]	61.5 [2.42]
	B	26.5 [1.04]	27.3 [1.07]	27.8 [1.09]	30.5 [1.20]	30.5 [1.20]
Inlet/Outlet		M10 x 1				

Model code examples and maximum shaft torque

Flange/drive gear	Model code example	Maximum shaft torque
01FA	TFP0NN/,57RN01FAP1D1D1NNNN/NNNNN	4.5 N•m [39.8 lb•in]

GROUP 1

Technical data – Group 1 gear pumps

		Frame size										
		1,2	**1,7**	**2,2**	**2,6**	**3,2**	**3,8**	**4,3**	**6,0**	**7,8**	**010**	**012**
Displacement	cm^3/rev [in^3/rev]	1.18 [0.072]	1.57 [0.096]	2.09 [0.128]	2.62 [0.160]	3.14 [0.192]	3.66 [0.223]	4.19 [0.256]	5.89 [0.359]	7.59 [0.463]	9.94 [0.607]	12.00 [0.732]
SNP1NN												
Peak pressure	bar [psi]	270 [3915]	270 [3915]	270 [3915]	270 [3915]	270 [3915]	270 [3915]	270 [3915]	210 [3045]	170 [2465]	–	–
Rated pressure	bar [psi]	250 [3625]	250 [3625]	250 [3625]	250 [3625]	250 [3625]	250 [3625]	250 [3625]	190 [2760]	150 [2175]		
Minimum speed at 0-150 bar	min^{-1} (rpm)	800	800	600	600	600	600	500	500	500		
Min. speed at 150 bar to rated pressure	min^{-1} (rpm)	1200	1200	1000	1000	1000	1000	800	800	800		
Maximum speed	min^{-1} (rpm)	4000	4000	4000	4000	4000	4000	3000	3000	3000		
SKP1NN*												
Peak pressure	bar [psi]	270 [3915]	270 [3915]	270 [3915]	270 [3915]	270 [3915]	270 [3915]	270 [3915]	250 [3625]	220 [3190]	170 [2465]	140 [2030]
Rated pressure	bar [psi]	250 [3625]	250 [3625]	250 [3625]	250 [3625]	250 [3625]	250 [3625]	250 [3625]	230 [3335]	200 [2900]	150 [2175]	120 [1740]
Minimum speed at 0-150 bar	min^{-1} (rpm)	800	800	800	800	800	800	600	600	600	600	600
Min. speed at 150 bar to rated pressure	min^{-1} (rpm)	1200	1200	1000	1000	1000	1000	1000	800	800	800	–
Maximum speed	min^{-1} (rpm)	4000	4000	4000	4000	4000	4000	3000	3000	3000	2000	2000

Port configurations

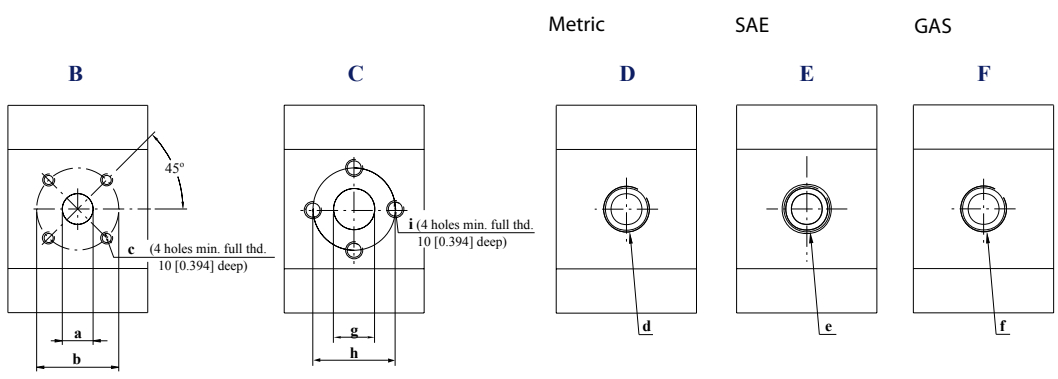

Flange, shaft and port configurations

Code	Flange		Shaft	
01BA	25.4 mm [1.0 in] pilot Ø European 4-bolt	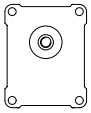	1:8 tapered	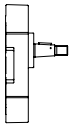
01DA	25.4 mm [1.0 in] pilot Ø European 4-bolt	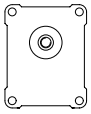	15-teeth splined m = 0.75 a = 30o	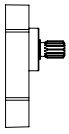
03CA	pilot Ø32 + O-ring + 2 holes through body	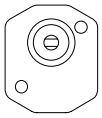	Danfoss tang	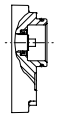

Flange, shaft and port configurations for SKP1NN

Code	Flange		Shaft	
02BB	30 mm [1.181] pilot Ø European 4-bolt	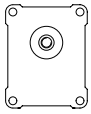	1:8 tapered	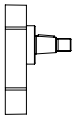
02FA	30 mm [1.181] pilot Ø European 4-bolt	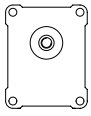	12 mm [0.472 in] parallel	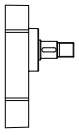
06GA	SAE A-A 2-bolt	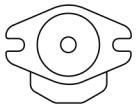	12.7 mm [0.5 in] parallel	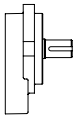
06SA	SAE A-A 2-bolt	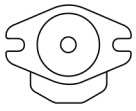	9-teeth splined SAE spline J 498-9T-20/40DP	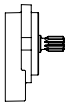

SNP1NN - 01BA and 01DA

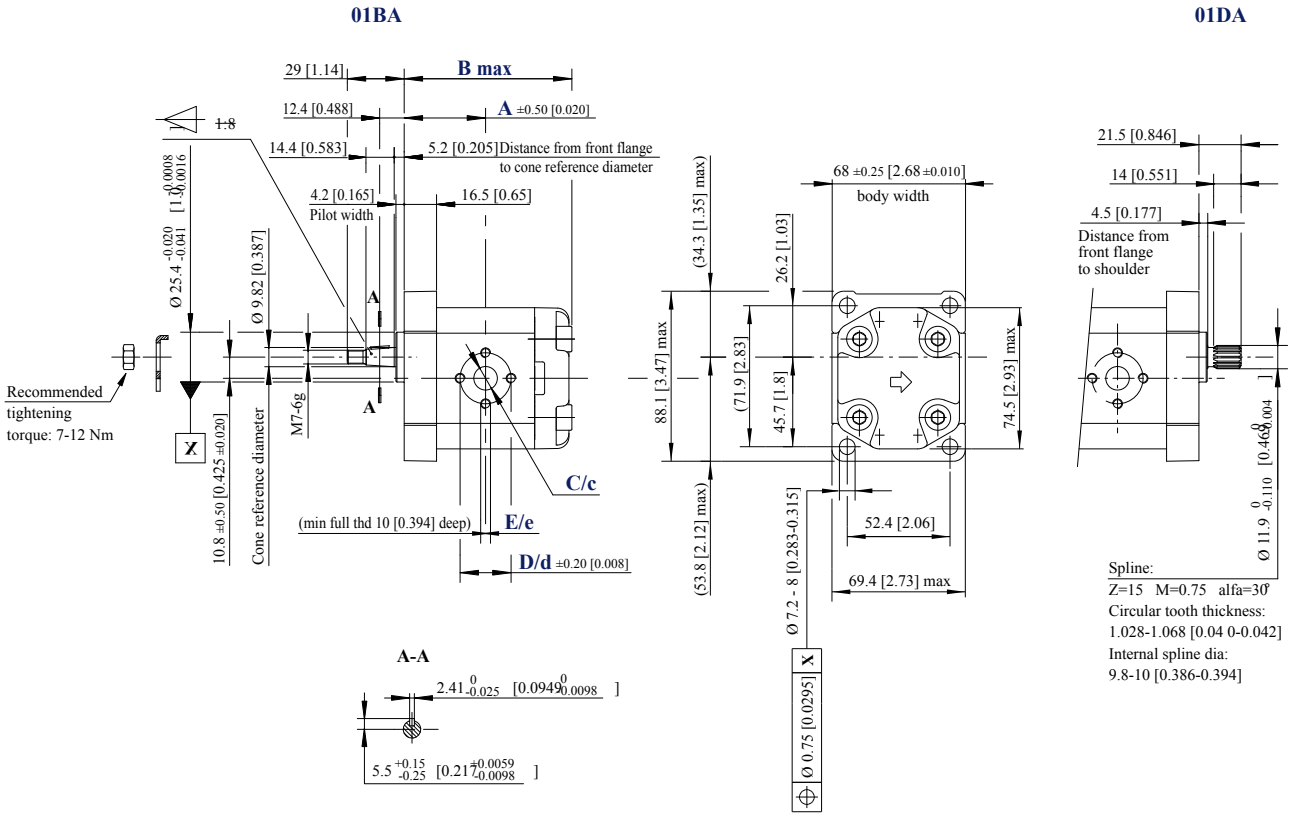

SNP1NN – 01BA and 01DA Dimensions

Frame size		1,2	1,7	2,2	2,6	3,2	3,8	4,3	6,0	7,8
Dimension	**A**	37.75 [1.486]	38.5 [1.516]	39.5 [1.555]	40.5 [1.634]	41.5 [1.634]	42.5 [1.673]	43.5 [1.713]	46.75 [1.841]	50.0 [1.969]
	B	79.5 [3.130]	81.0 [3.189]	83.0 [3.268]	85.0 [3.346]	87.0 [3.425]	89.0 [3.504]	91.0 [3.583]	97.5 [3.839]	104.0 [4.094]
Inlet/Outlet	**C/c**	12 [0.472]								
	D/d	26 [1.024]								
	E/e	M5								

Model code examples and maximum shaft torque

Flange/drive gear	Model code example	Maximum shaft torque
01BA	SNP1NN/3,8RN01BAP1C2C2NNNN/NNNNN	25 N•m [221 lb•in]
01DA	SNP1NN/6,0LN01DAP1C2C2NNNN/NNNNN	35 N•m [310 lb•in]

SKP1NN – 02BB and 02FA

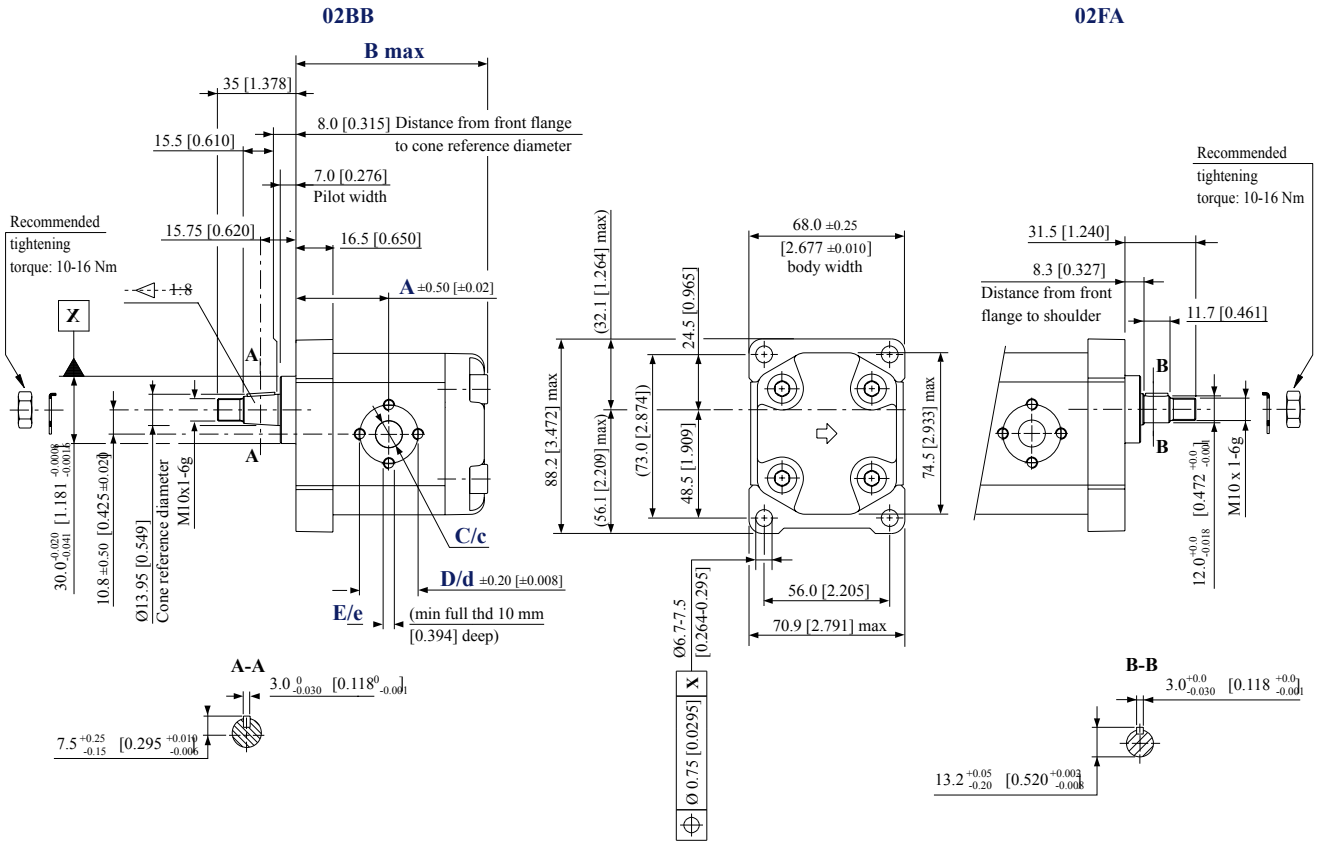

SKP1NN – 02BB and 02FA dimensions

Frame size		1,2	1,7	2,2	2,6	3,2	3,8	4,3	6,0	7,8	010	012
Dimension	**A**	37.75 [1.486]	38.5 [1.516]	39.5 [1.555]	40.5 [1.634]	41.5 [1.634]	42.5 [1.673]	43.5 [1.713]	46.75 [1.841]	50.0 [1.969]	54.5 [2.146]	58.5 [2.303]
	B	79.5 [3.130]	81.0 [3.189]	83.0 [3.268]	85.0 [3.346]	87.0 [3.425]	89.0 [3.504]	91.0 [3.583]	97.5 [3.839]	104.0 [4.094]	113.0 [4.449]	121.0 [4.764]
Inlet/Outlet	**C/c**	12 [0.472]										
	D/d	26 [1.024]										
	E/e	M5										

Model code examples and maximum shaft torque

Flange/drive gear	Model code example	Maximum shaft torque
02BB	SKP1NN/6,0RN02BBP1C2C2NNNN/NNNNN	50 N•m [442 lb•in]
02FA	SKP1NN/ 2,2LN02FAP1C2C2NNNN/NNNNN	24 N•m [212 lb•in]

SNP1NN – 03CA

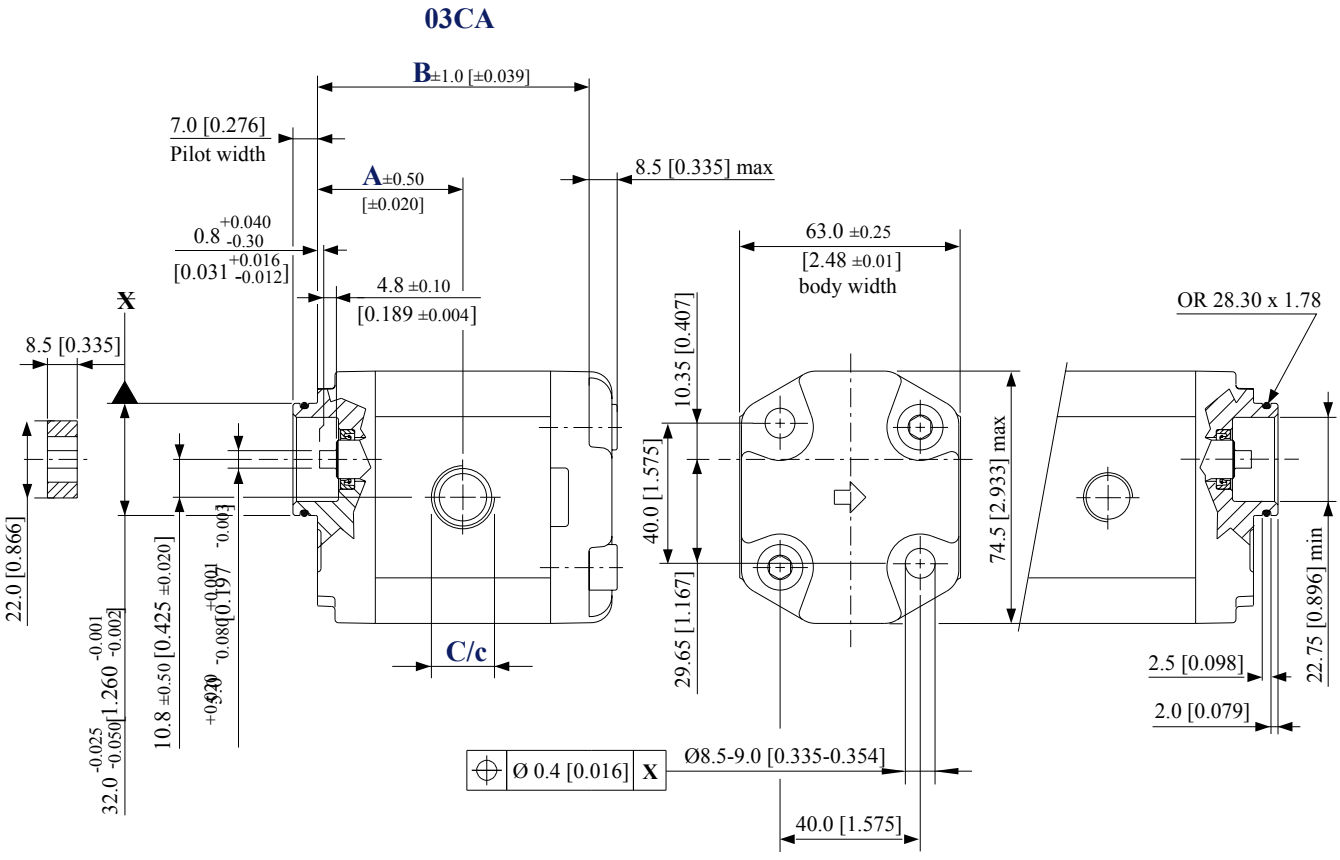

SNP1NN – 03CA dimensions

Frame size		1,2	1,7	2,2	2,6	3,2	3,8	4,3	6,0	7,8
Dimension	**A**	37.75 [1.486]	38.5 [1.516]	39.5 [1.555]	40.5 [1.634]	41.5 [1.634]	42.5 [1.673]	43.5 [1.713]	46.75 [1.841]	50 [1.969]
	B	70 [2.756]	71.5 [2.815]	73.5 [2.894]	75.5 [2.972]	77.5 [3.051]	79.5 [3.130]	81.5 [3.209]	88.0 [3.465]	94.5 [3.720]
Inlet	**C**	M18 x 1.5 THD 12 [0.472] deep								
Outlet	**c**	M14 x 1.5, THD 12 [0.472] deep					M18 x 1.5, THD 12 [0.472] deep			

Model code examples and maximum shaft torque

Flange/drive gear	Model code example	Maximum shaft torque
03CA	SNP1NN/1,7RN03CA03D5D3NNNN/NNNNN	14 N•m [124 lb•in]

SKP1NN – 06GA and 06SA

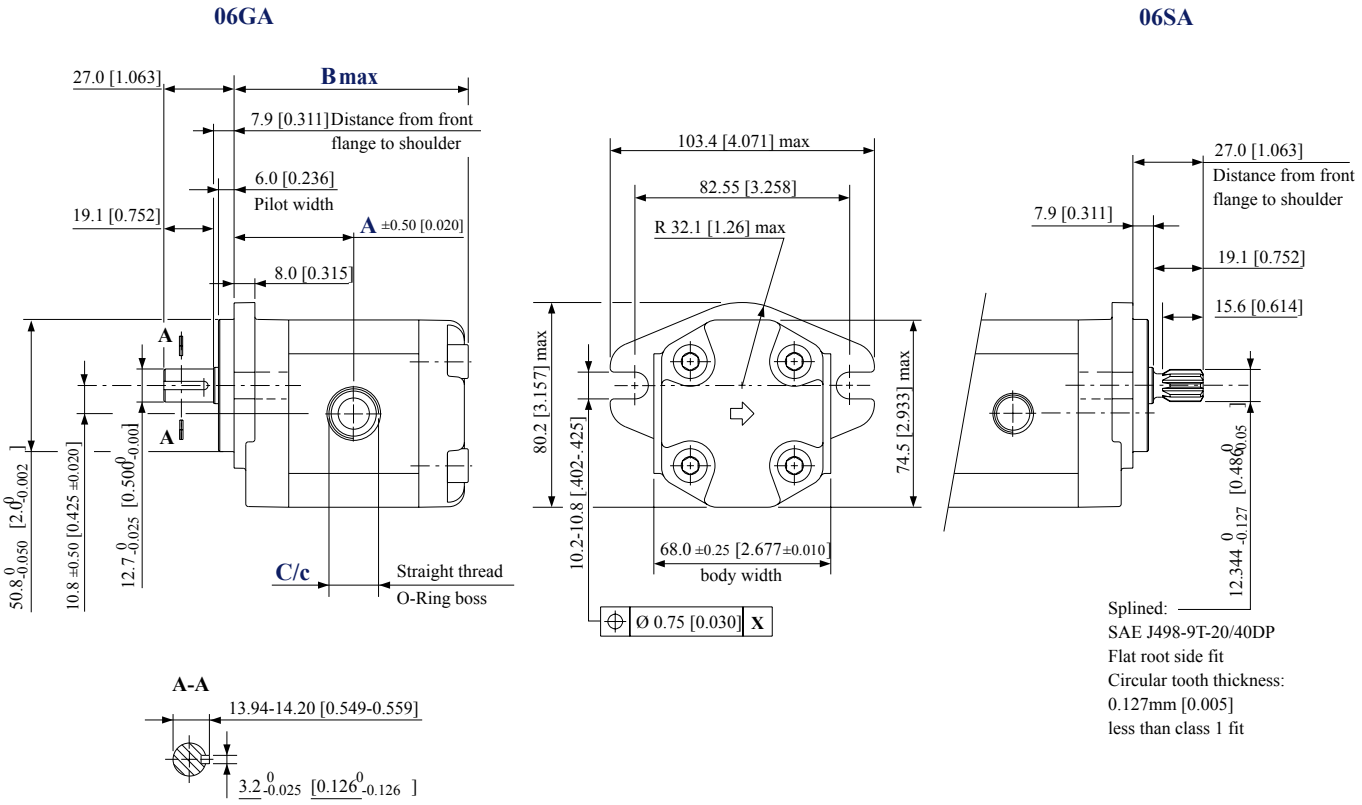

SKP1NN – 06GA and 06SA dimensions

Frame size		1,2	1,7	2,2	2,6	3,2	3,8	4,3	6,0	7,8	010	012
Dimension	A	42.25 [1.663]	43 [1.693]	44 [1.732]	45.0 [1.772]	46.0 [1.811]	47 [1.850]	48 [1.890]	51.25 [2.018]	54.5 [2.146]	59 [2.323]	63.5 [2.50]
	B	84 [3.307]	85.5 [3.366]	87.5 [3.445]	89.5 [3.524]	91.5 [3.602]	93.5 [3.681]	95.5 [3.760]	102 [4.016]	108.5 [4.272]	117.5 [4.626]	125.5 [4.941]
Inlet	C	¾–16UNF–2B, THD 14.3 [0.563] deep										
Outlet	c	9/16–18UNF–2B, THD 12.7 [0.500] deep										

Model code examples and maximum shaft torque

Flange/drive gear	Model code example	Maximum shaft torque
06GA	SKP1NN/3,2RN06GAP1E4E3NNNN/NNNNN	32 N•m [283 lb•in]
06SA	SKP1NN/012LN06SAP1E4E3NNNN/NNNNN	34 N•m [301 lb•in]

- SAMER has become a preferred Hydraulic Supplier with many Manufactorers because offers the best of what really matters: the hardware at the internal core of the Machine Application.
- SAMER offers following services:
- -Systems design with pumps and motors in closed and open loop circuits including valves,
- -Sale of hydraulic components and electronic devices.
- -Commissioning and start up on machinery.
- -Repair of hydraulic components
- -Postsale and service troubleshoot on phone