# Closed Circuit Piston Pump SERIES PMH P

**Description**

MH high pressure axial piston pumps for closed loop are specifically designed to be used on heavy duty machines for traction and auxiliary functions, providing efficiency and durability.

**500 BAR TECHNOLOGY**

The global structure of the transmission is designed to handle pressure and loads without deformation: in this way efficiency is also maintained in high pressure working conditions.

**Highlight**

500 bar pressure technology, i.e. extremely solid pumps for the toughest applications and conditions.
Wide range of controllers from manual MS, to electric proportional EP, to specialcontrollers like MY, RE specifically designed or special application.
Premium materials, tight tolerances and precision machining
On demand, PHM P feature an additional valve block to include flushing alve, by pass system, dead man valve, cut off valve.

## Product range and technical data

| Model | | | P35 | P55 | P72 | P90 | P110 | P180 |
|---|---|---|---|---|---|---|---|---|
| Displacement | V | $cm^3$ | 35,4 | 55,0 | 72,1 | 89,2 | 110,0 | 176.1 |
| Maximum speed | $n_{max}$ | rpm | 4.500 | 4.300 | 4.100 | 4.000 | 3.800 | 2.900 |
| Minimum speed | $n_{min}$ | rpm | 500 | 500 | 500 | 500 | 500 | 500 |
| Maximum flow | $q_{max}$ | l/min | 142 | 237 | 295 | 340 | 400 | 511 |
| Nominal pressure | $p_{nom}$ | bar | 400 | 400 | 400 | 400 | 400 | 400 |
| Maximum pressure | $p_{max}$ | bar | 450 | 450 | 450 | 450 | 450 | 450 |
| Maximum power | $P_{max}$ | kW | 95 | 130 | 156 | 180 | 210 | 273 |
| Theoretical max torque | $C_{max}$ | Nm | 223 | 350 | 480 | 570 | 700 | 1.121 |
| Weight | M | Kg | 39 | 42 | 56 | 68 | 68 | 148 |

**Available controls**

MS,Proportional Manual Control

With the manual proportional control (MS) the displacement of the pump is directly proportional to the angle of the lever. The pump is fitted with a resetting device which automatically reset the lever to central position if no control takes place.

EP, electric proportional control

With the electric proportional control (EP) the displacement of the pump is directly proportional to the input current applied to one of the two solenoids. The pump is fitted with a resetting device which automatically reset the control spool to central position if no control takes place.

HP, Hydraulic proportional control (with mechanical feedback)

With the hydraulic proportional control (HP) the displacement of the pump is directly proportional to the pilot pressure applied to one of the two control pressure ports. The pump is fitted with a resetting device which automatically reset the control spool to central position if no control takes place.

# PMH P

Size 35

MS, Proportional manual control

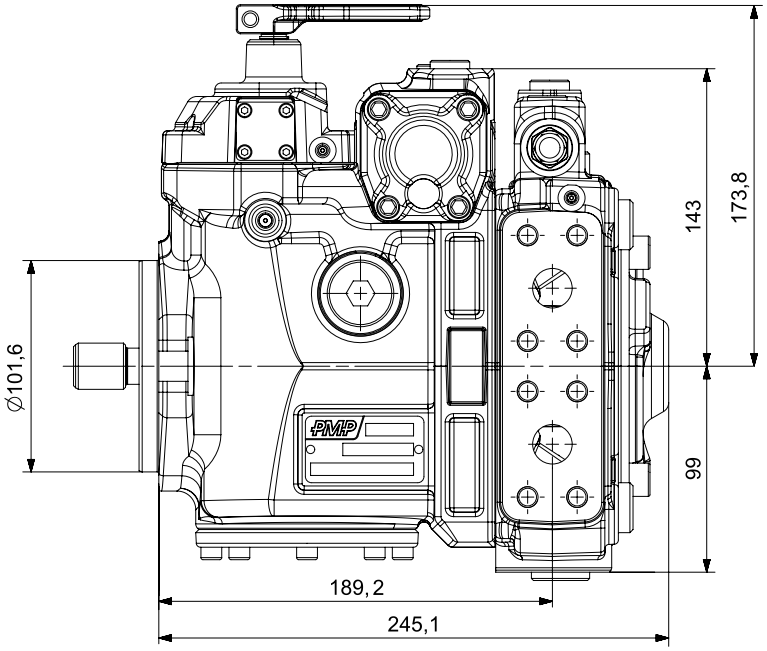


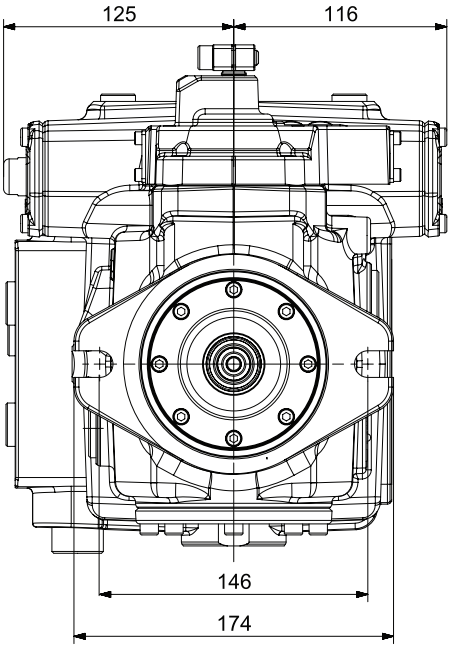


EPI, Proportional electric control

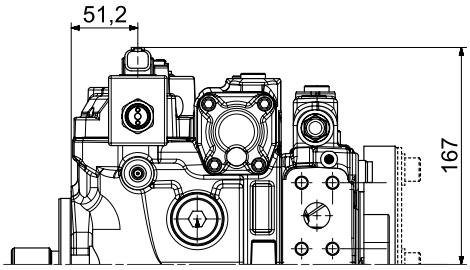


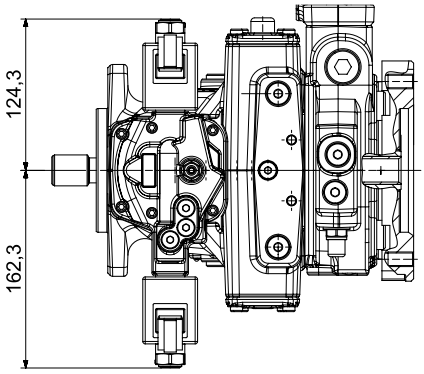

# PMH P

## Size 55

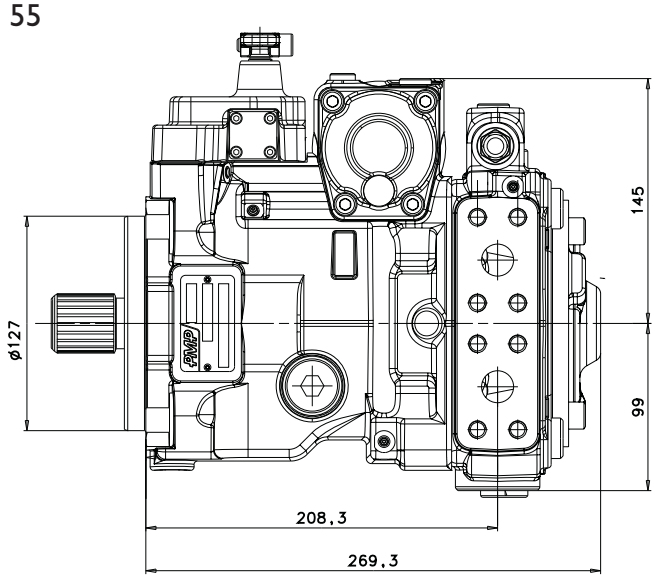


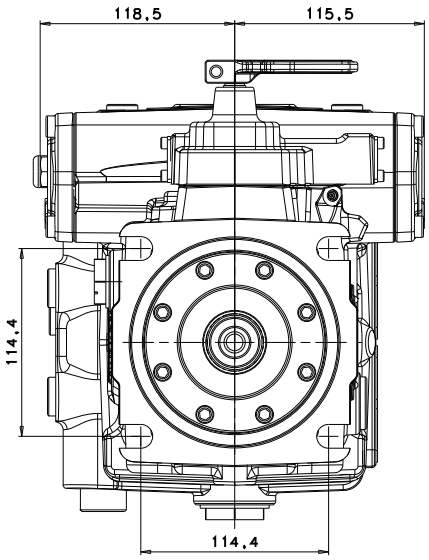


## MS, Manual control

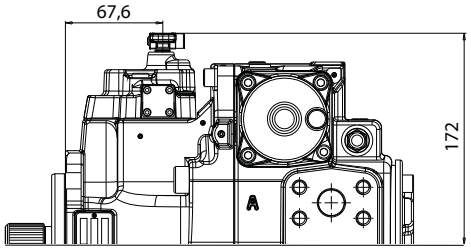


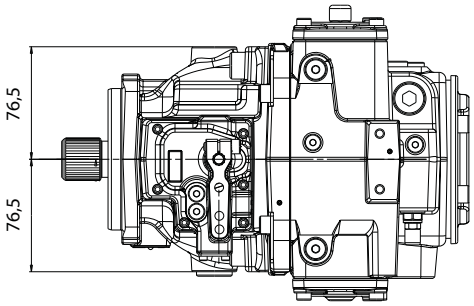


## EP, Proportional Electric Control

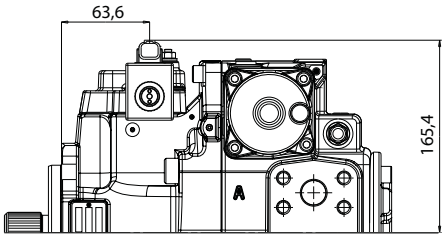


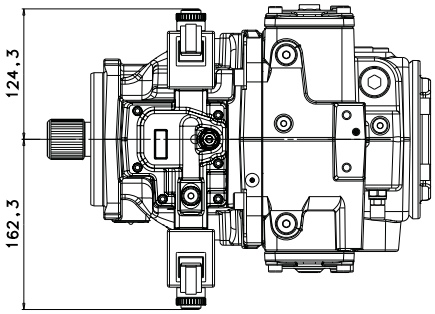


## HP, Proportional hydraulic control

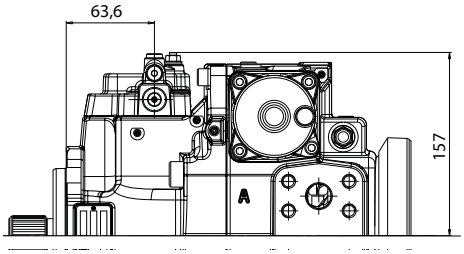


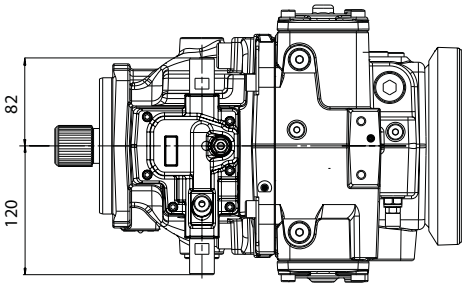


# PMH P

## Size 72

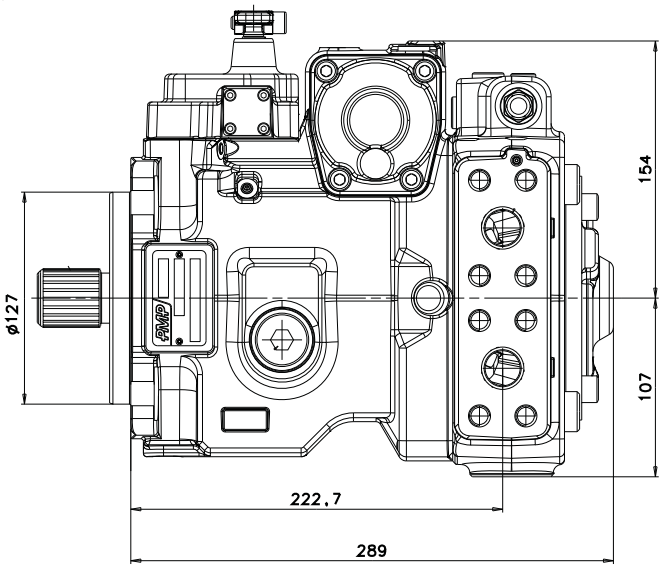


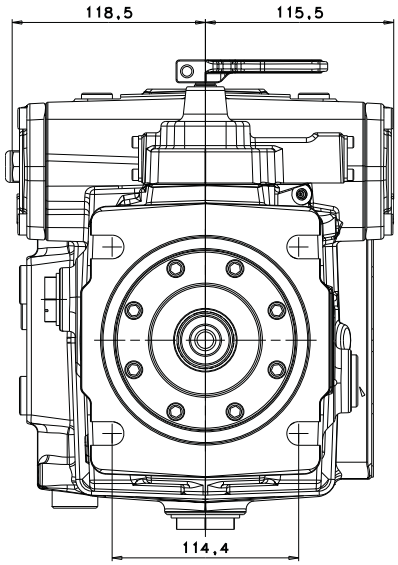


## MS, Manual control

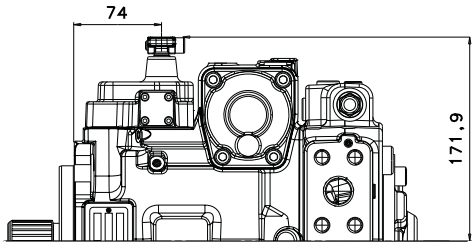


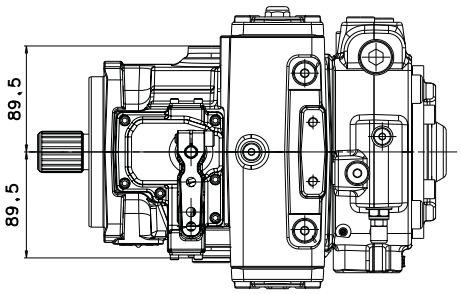


## EP, Proportional Electric Control

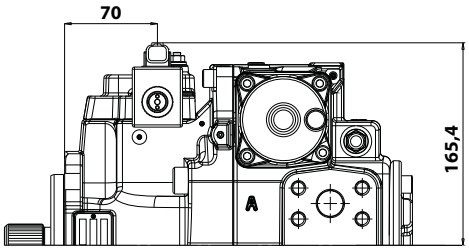


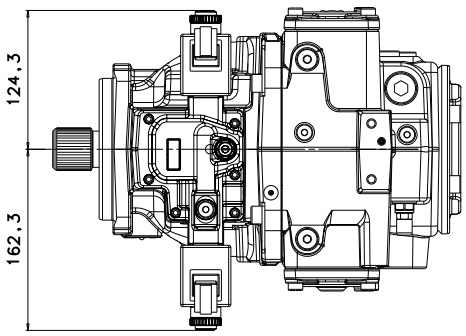


## HP, Proportional hydraulic control

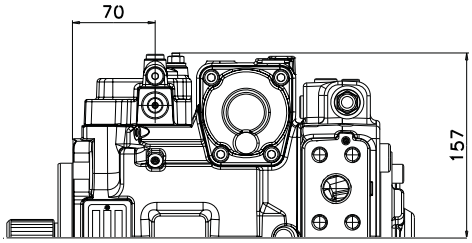


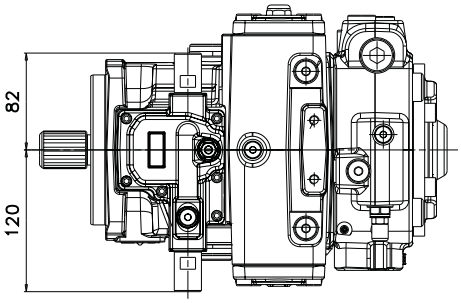

# PMH P

## Size 90 / 110

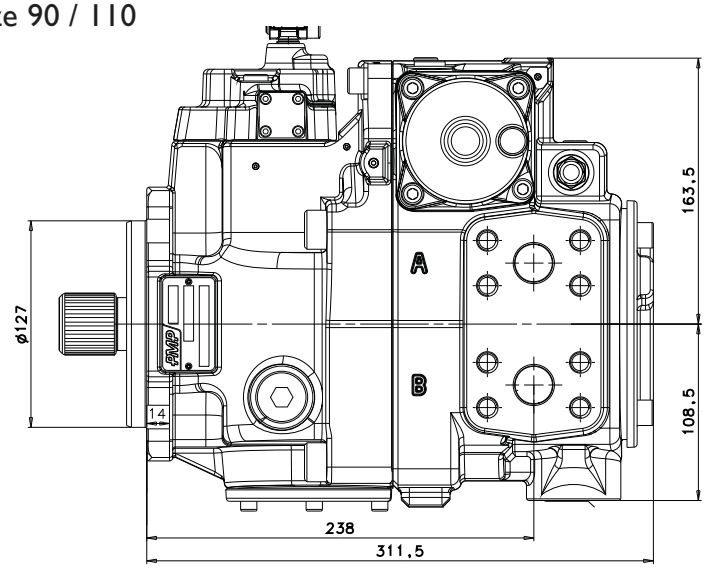


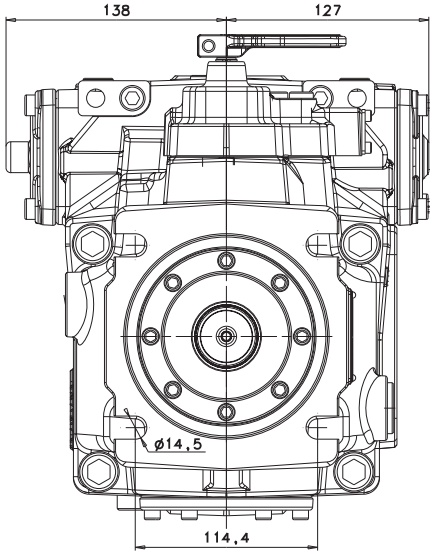


## MS, Manual control

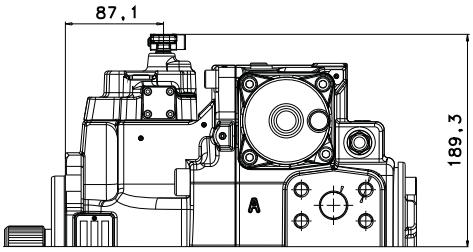


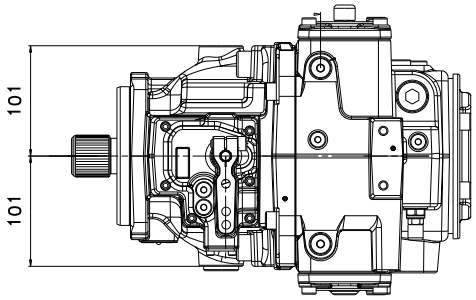


## EP, Proportional Electric Control

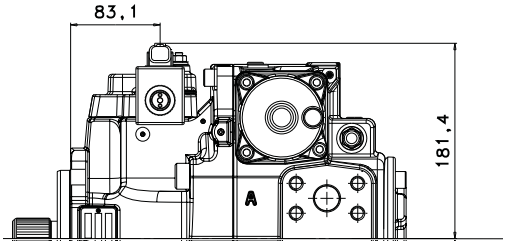


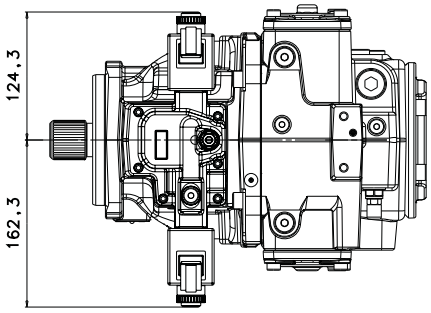


## HP, Proportional hydraulic control

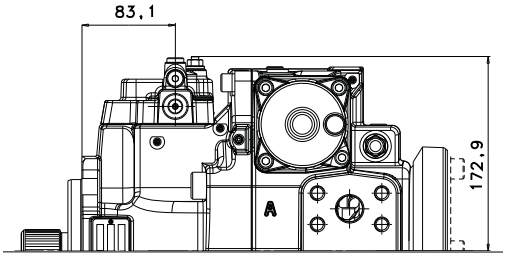


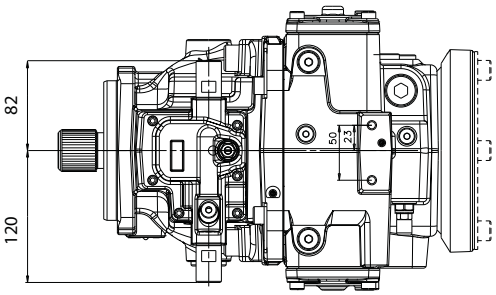


***SAMER services***

*-Design of systems with pumps and motors in closed and open circuits*
*-Sale of pumps and motors in closed and open circuits*
*-Installation and testing of pumps and motors in closed and open circuits*
*-Repair of pumps and motors in closed circuit and open circuit*

# PMH P

## Size 180

HP, Hydraulic proportional control

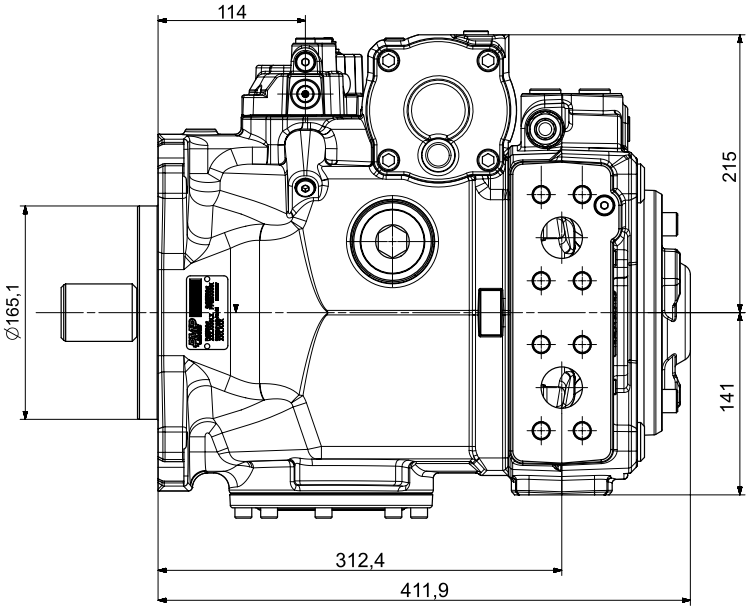


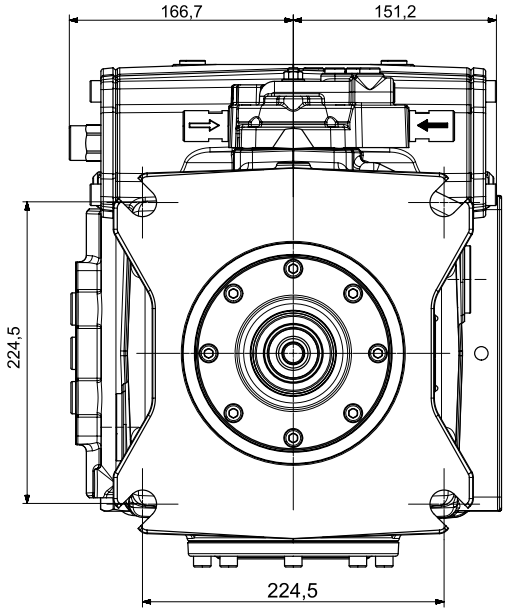


## Size 210

EP2, Electric Proportional Control

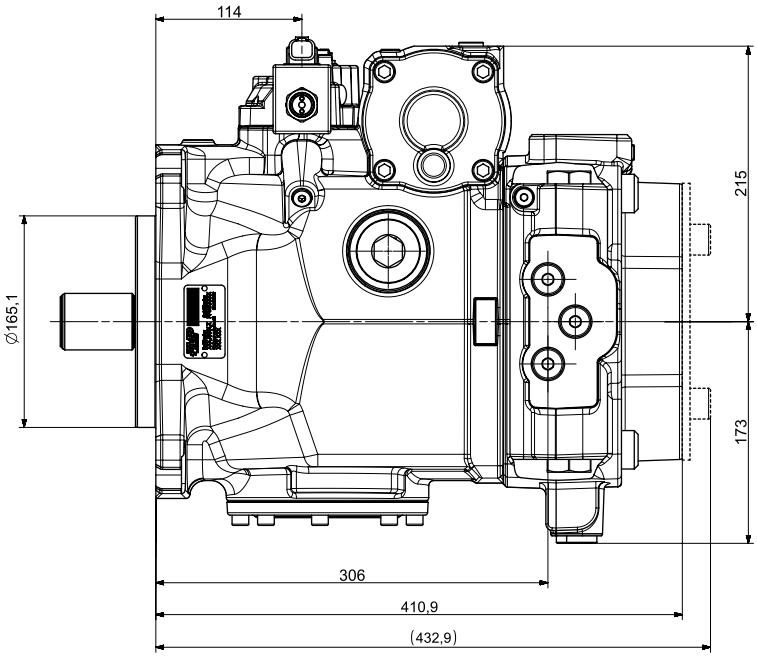


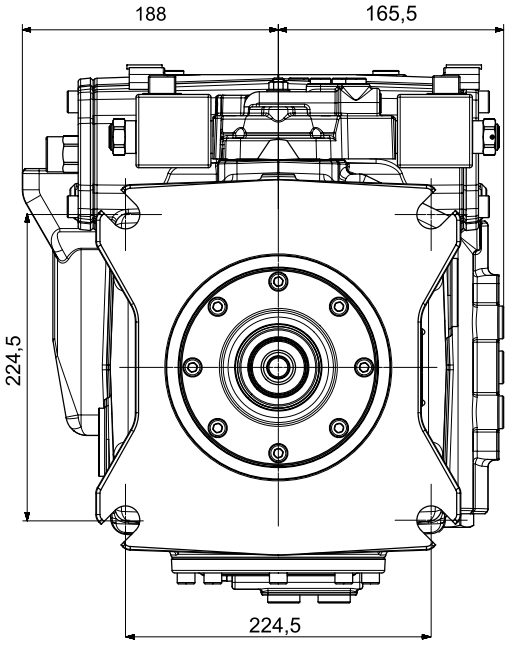


***SAMER S.r.l.*** C.da Molino 58/C - Campofilone FM - 63828
Tel: +39 0734 340364 - 06 30818297 - Cell.+39 348 6937145
info@samer.company - www.samer.company